SPECIFICATIONS

GENERAL REQUIREMENTS

Summary: 1. All construction to be in accordance with 2009 IRC, local, and state building code requirements.
2. The builder shall verify all dimensions and conditions on drawings, and shall be responsible for all adjustments and corrections made to the drawings in the field.
3. Written dimensions on these drawings shall have precedence over scaled dimensions. Contractors shall verify and be responsible for all dimensions on the job, and this office must be notified of any variations from the dimensions and conditions on these drawings.
4. Should a conflict of information within these drawings or between the drawings or other instruments of this project occur, the more restrictive or greater value shall be required.
5. Any installations, equipment, methods or procedures in violation of any government building codes shall not be acceptable. The contractor or any entity working on their behalf shall notify this office of any deviations, deficiencies, errors or omissions prior to start of construction. Failure of such notification or commencement of subsequent work shall hold this office harmless for damages, demolition or replacement of equipment or installation in question.
6. Contractors shall verify all openings and inserts and architectural, mechanical, plumbing and electrical with appropriate trades, drawings, and subcontractors prior to construction.
7. Construction drawings and specifications may not be complete, nor are they inclusive of every condition encountered during construction. It is the contractor's responsibility to review the drawings and specifications prior to construction. It is also the contractor's responsibility to notify this office prior to construction, should they have questions or require clarifications regarding specific details or circumstances encountered. The contractor shall obtain and maintain quality work commensurate with industry standards. This office is not responsible for any construction means, methods, techniques, or details not shown in the drawings.

The Contractor shall provide all required permits, including building permit.

Scope: Construct a new one story duplex with attached garage.

Schedule: The Contractor will provide for maintaining access to the site throughout the duration of the project and bill the client as necessary for snow removal. Generally, this will be Monday to Friday between the hours of 7 am and 4 pm. The Contractor reserves the right to allow subcontractors access to the site on weekends as necessary.

Owner-provide Items: None

Insurance: The Contractor will provide for general liability and homeowner's insurance on the house during construction. At completion, the responsibility for homeowner's insurance transfers to the Owner/Developer.

Submittals: Where indicated, submittals require Owner/Developer and Architect approval prior to ordering materials. Provide submittals in a timely fashion that allows adequate review without delaying the work.

Quality: The Contractor shall be responsible for replacing or repairing any faulty material or workmanship, without additional cost to the Owner/Developer, for a period of one year after receiving the final inspection certificate from the county or city. The Contractor will use normally accepted techniques and practices in all aspects of constructing the residence including work done in cold and inclement weather.

Temporary Facilities: The Contractor is responsible for utility charges (excluding initial contract setup fees) incurred during construction for utilities listed in the Contractor's scope of work. Upon completion, the Owner/Developer assumes responsibility for all utility charges.

Site Appearance: All vehicles must be removed by 7 pm every day and all building materials must be stored properly on the site and not on the street or common area.

SITE

Demolition/Abatement: NA

Sitework: It is the Owner/Developer's responsibility to convey to the Architect/Contractor any covenants or restrictions that limit use of the project site. It is the Owner's responsibility, unless delegated to the Contractor, to supervise site work such as tree removal, location of roads, wells, landscaping, irrigation, and site lighting.

Utilities: The Contractor will provide for the installation of power, telephone, cable, and natural gas (if available). The Contractor will coordinate the installation of water and sewer; however, the tap fees for connection to a public water and/or sewer district are by the Owner/Developer. All necessary utilities shall be routed underground to the building. Power, telephone, cable, and gas must be at their approved depth and carefully backfilled. Water line must be buried no less than 42" and installed per code.

Drainage: Where directed by Architect, provide 4" french drains at upslope foundation walls routed to daylight or a remote gravel sump. Landscaper to provide tight lines to accept gutter downspouts that slope away from the building to daylight or a swale with gravel rip-rap. The Owner/Developer must approve all drainage plans prior to commencing work. Excavator must communicate to the Contractor if any wet conditions are found during excavation.

CONCRETE

Cast-in-Place Concrete: See Foundation Plan(s) for footing and foundation sizes. It is mandated by the development to complete the curb cut for the driveway within 7 days of pouring the concrete foundation. The resulting approach is required to be filled with gravel.

Minimum concrete compressive strength shall be 3,000 PSI. All footings to bear on firm, undisturbed soil. All footings to extend below 36" frost line. Foundations supporting wood to extend at least 6 inches above the adjacent grade. Foundation construction shall be capable of accommodating all loads according to Section R301 and of transmitting the resulting loads to the supporting soil. Fill soils that support footings and foundations shall be designed, installed, and tested in accordance with accepted engineering practice. Gravel fill used as footings for wood and precast concrete foundations shall comply with Section R403. Surface drainage shall be diverted to a storm conveyance or other approved point of collection so as to not create a hazard. Lots shall be graded to drain surface water away form foundation walls. The grade shall fall a minimum of 6" within the first 10'. In areas likely to have expansive, compressible, shifting or other unknown soil characteristics, the building official shall determine whether to require a soil test to determine the soils characteristics at a particular location. This test shall be made by an approved agency using an approved method per section R401.4. Exterior plates shall be attached to the foundation with Simpson mudsill anchor LMA into concrete at 6'-0" O.C., with Hilti pins @ 24" O.C. and max 12 inches from ends, typical. Wood in direct contact with concrete or masonry to be pressure-treated. Fasteners for pressure-treated wood shall be of galvanized steel. Fill underground supported slab with 4" well compacted sand or gravel. Provide keyed controlled joints in slab on grade at 25' O.C. and 1/2" tooled joints at 5' O.C. in exterior slabs on walks. Provide 6 mil. of poly barrier below finish slab. Columns shall be anchored at the base to prevent lateral displacement. Garage floor surfaces shall be sloped toward the main vehicle entry per Foundation Plan. Install radon mitigation as required by code.

WOODS, PLASTICS, & COMPOSITES

Materials: Use at least 50% FSC Certified wood products.

Rough Carpentry: See Framing Plan(s) for lumber specifications. Trusses to be oversized to allow for full insulation to the exterior wall.

Architectural Woodwork: Interior casing on doors and windows to be 2 1/4" paint grade wood or MDF. Window sill to be 1X material, paint grade or finished clear. Base trim to be 2 1/4" paint grade wood or MDF. All cabinet doors and drawers to be determined by contractor. Cabinet box construction TBD by contractor. Closet shelf material by contractor.

Stairs: A minimum headroom clearance for stairways of not less than 6'-8" shall be provided. The minimum riser height shall be 7 3/4" and the minimum tread depth shall be 10". The largest tread run and the greatest riser height within any flight of stairs shall not exceed the smallest by more than 3/8". The profile of the treads and risers shall conform to Section R311.5.3.3. Stairways have a minimum clear width of 36" above the permitted handrail height. Stairways should have a minimum clear width of 31.5" at and below the handrail where only one handrail is provided, or 27" where handrails are provided on both sides per Section R311.5.1. All stairways, both interior and exterior, shall be provided with illumination per Section R303.6. There shall be a floor or landing at the top and bottom of each stairway except at the top of an interior stairway provided no door swings over the stair. The width of each landing shall not be less than the stairway served. A flight of stairs shall not have a vertical rise greater than 12'-0" between floor levels or landings. Nosing of not less than 3/4" but not more than 1 1/4" shall be provided on the stairways with solid risers. Beveling of nosing shall not exceed 1/2". Open risers are permitted, providing that the opening between each tread does not permit of a 4" diameter sphere.

Railings: Porches, balconies, ramps or raised floor surfaces located more than 30" above the floor or grade below shall have guards not less than 36" in height. Handrails shall not be less than 36" in height, except on stairways where they may be 34" to 38". Open handrails and stair railing shall be continuous the full length of the stairs, have ends which are returned, rounded or bent, and shall have intermediate rails or ornamental closures which do not allow passage of a sphere 4" or more in diameter. Stairways shall have at least one handrail, and handrails shall be installed on open sides of stairways. Handrails projecting from the wall shall have a space of not less than 1 1/2" between the wall and the handrail. Handrail cross-sections with a circular cross-section shall have an outside diameter of at least 1 1/4" and not greater than 2".

THERMAL & MOISTURE PROTECTION

Dampproofing & Waterproofing: Provide dampproofing on all concrete walls below grade. Slope grade away from structure for a minimum 6" per 10' surrounding the footprint. In interior wet areas, use materials that have smooth, durable, cleanable surfaces. Seal all grout and avoid mold propagating materials.

Insulation & Sealants: Insulate all exterior framing cavities prior to covering. Do not cover any vents with insulation. Cut batt insulation 1/2" to 3/4" wider and longer than actual dimension to insure snug fit without voids. Kraft-faced or foam plastic insulation cannot be left exposed. Seal all exterior cracks with expanding insulating foam or non-hardening, paintable caulk. Isolate garage from living space. See Details for approach.

Slab on grade:	3" DOW Rigid foam	R-15
Exterior walls:	5 1/2" BATT + 2" DOW rigid foam	R-30
Roof:	Blown in	R-49
Garage separation wall:	5 1/2" BATT	R-21
Floor cavity above garage:	9 1/2" BATT	R-30 min.

Roofing: See Products/Finishes Legend for roofing and flashing selections. Install ice & water shield for the entire width of all eaves, to a minimum distance of 24" from the exterior wall line of the building. Use roof to wall flashing at all appropriate conditions. Provide ridge vents at all ridges and hips.

Roof Drainage: Provide continuous gutters at all roof areas, unless noted otherwise. Gutter color TBD. Verify location of downspouts with Owner and Architect prior to fabrication.

Siding: Siding to be 8" lap siding or shingle panels. See wall sections for wall assembly. See elevations for locations of all siding. All outside vertical corners shall be trimmed with preprimed LP SumX2x4 material or similar. Exterior trim of windows and doors to be preprimed LP SumX 2x4 or similar on all sides. Attach siding with galvanized fasteners in straight rows, fastener spacing and joint size per siding manufacturer. Siding and trim colors to be determined by owner and contractor.

OPENINGS

Doors & Frames: See Plans for door sizes and locations. Exterior entry door to be a 3 foot wide double core steel clad with a minimum R5 R-value. Interior passage doors on ground floor to be 3 foot wide pre-hung (ADA). All other interior doors to be varying Bi-fold. Door selection and finishes to be selected by contractor. All exterior doors to have insulated headers, see detail sheet. Sliding patio door to be full glazed and tempered.

Windows: See Floor Plans for window sizes and locations. Window selection and finishes to be selected by contractor. All **glazing within 18" of floor or 24" of doors, to be tempered glass.** All windows to have insulated headers, see detail sheet. Windows to have thermal rating of U=0.30 or better. Window weatherproofing to be as follows:

1. Install housewrap into opening.
2. Cut flap at top.
3. Install sill-pan flashing.
4. Apply sealant to the sides of the window opening on sides and top.
5. Install window fastening to top and sides only.
6. Install approved flashing tape at sides.
7. Install approved flashing tape at top.
8. Fold down housewrap and tape the flap corners.

See window sill details for trim material and size.

FINISHES

Gypsum: Provide 1/2" gypsum board on all walls and 5/8" gypsum board on all ceilings. Water-resistant gypsum board shall be used at incidental moisture areas of bathrooms and laundry rooms. Provide square bullnose metal corners at outside corners. Texture walls and ceilings with a light orangepeel texture. Interior colors TBD by home owner and contractor. Prior to texturing, apply a vapor barrier primer on all exterior walls and ceilings. Mask all adjacent surfaces to protect finish.

Flooring: All carpeting, pads and adhesives must be CRI Green Label Plus certified.

Painting & Coating: All interior paints and primers must comply with current Green Seal standards for low VOC limits. All adhesives must comply with Rule 1168 of the South Coast Air Quality Management District. All caulks and sealants must comply with Regulation 8 Rule 51 of the Bay Area Air Quality Management District.

EQUIPMENT

Appliances: Contractor will provide Energy Star clothes washers, dishwashers and refridgerators. Contractor will supply and hook up all appliances.

PLUMBING/MECHANICAL/ELECTRICAL/LIGHTING

Plumbing: All plumbing work shall comply with applicable codes and be guaranteed for one year. Domestic water lines shall be color-coded PEX plastic, waste lines shall be black PVC. Size and support water lines to minimize sound transfer to building structure. Where water heaters or hot water storage tanks are installed in locations where leakage of the tank or connections will cause damage, the tank or water heater shall be installed in a galvanized steel pan, having a minimum thickness of 24 gauge per Section P2801.5. Insulate all hot and cold water pipes in accordance with the UPC as amended by Washington State, and in accordance with the Washington State Energy Code (2009) edition. Provide one frost-free type outside hose bib as indicated on floor plan. Plumbing fixtures to include the following:

Toilets	1.6 GPF or less
Showerheads	2.0 GPM or less
Kitchen Faucets	2.0 GPM or less
Bathroom Faucets	1.5 GPM or less
Shower Stalls	Use a one piece fiberglass unit

Mechanical: Heating and cooling systems are bidder-designed and require contractor approval. Heating shall be provided by radiant piping in the slab. In second floor options, upper floor heating will be provided by radiant piping in the floor cavity. Over unheated locations, the radiant piping will be separated by a minimum R30 insulation. Locate equipment per plan and manufacturers specifications. Ducting per code for all equipment, appliances, and fans.

Gas Hot Water Heater - to meet or exceed current energy star requirements.

Ventilation: See elevations for exterior exhaust locations of Dryer vent, Range vent, Hot Water vent, and other exhaust vents. Duct lengths to be a maximum of 25 feet, unless the appliance specifications allow otherwise. All exhaust duct terminations to be a minimum 3' from any opening in the building. Range hoods must be installed a minimum of 24" above the cooking surface. Install Energy Star labeled minimum 50 CFM bathroom fans, equipped with a timer or humidistat sensor. Install an Energy Star minimum 100 CFM fan in the kitchen. Both shall be vented to the exterior with smooth duct and equipped with back-draft damper. Ducts shall be made of metal and have smooth interior surfaces. Kitchen fan shall have a separate termination point. Whole house exhaust fans are recommended, at 80 CFM minimum on programmable timer set to run twice a day for 30 minutes each or equivalent. Such fan shall have a sone rating of 1.5 or less and shall be equipped with a back-draft damper. All penetrations (plate junctions, around windows and doors, any openings through envelopes) shall be air sealed.

Electrical: All electrical work shall comply with applicable codes and be guaranteed for one year. Electrical service shall be run underground, unless noted otherwise. Provide 200 amp service to each side of the duplex. See Electrical Plan for meter location. All outlets and switch type to be decided by contractor. See Electrical Plan for locations of all outlets, switches, and light fixtures. The electrician shall provide connections to all appliances and provide and install all in-line fire/smoke detectors per code.

Lighting: Install Energy Star labeled lighting fixtures for interior units. Use Energy Star or high-efficiency commercial grade fixtures in all common areas and outdoors. Install daylight sensors or timers on all exterior lighting.

ADA COMPLIANCE

General: All passage doors to be 3'-0" wide. Hallways to be framed a minimum 3'-5" wide. All door hardware shall be operable with one hand and of the "lever" type.

Entry: All entrances will be covered and will have no step. Ramps/walkways leading to the entry will have a maximum running slope of 1:12. Walkway width shall be a minimum 36". Landing areas adjacent to entries will be a minimum 3'X5' without a direction change, and 5'X5' with a direction change.

Bathroom: The main floor bathroom will provide a 60" diameter turning space. Mirrors will be mounted with the reflecting surface a maximum 40" from the finish floor. The centerline of the toilet will be mounted between 16-18" from the side wall, and the toilet seat height will be 17-19". A toilet clearance of 60" from the sidewall and 56" from the backwall will be provided. 2x12 blocking for future grab bars in both toilet locations and bathing locations will be provided per the ICC/ANSI A117.1-2003, sections 604.5 and 607.4.

Electrical: All wall switches should be mounted at least 48" above finish floor. All outlets should be located 18" above the finish floor.

HISS 3X3

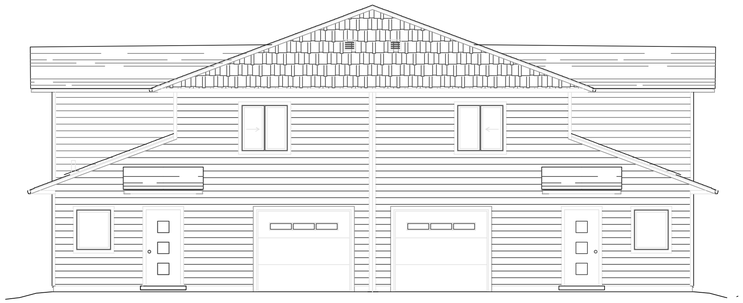

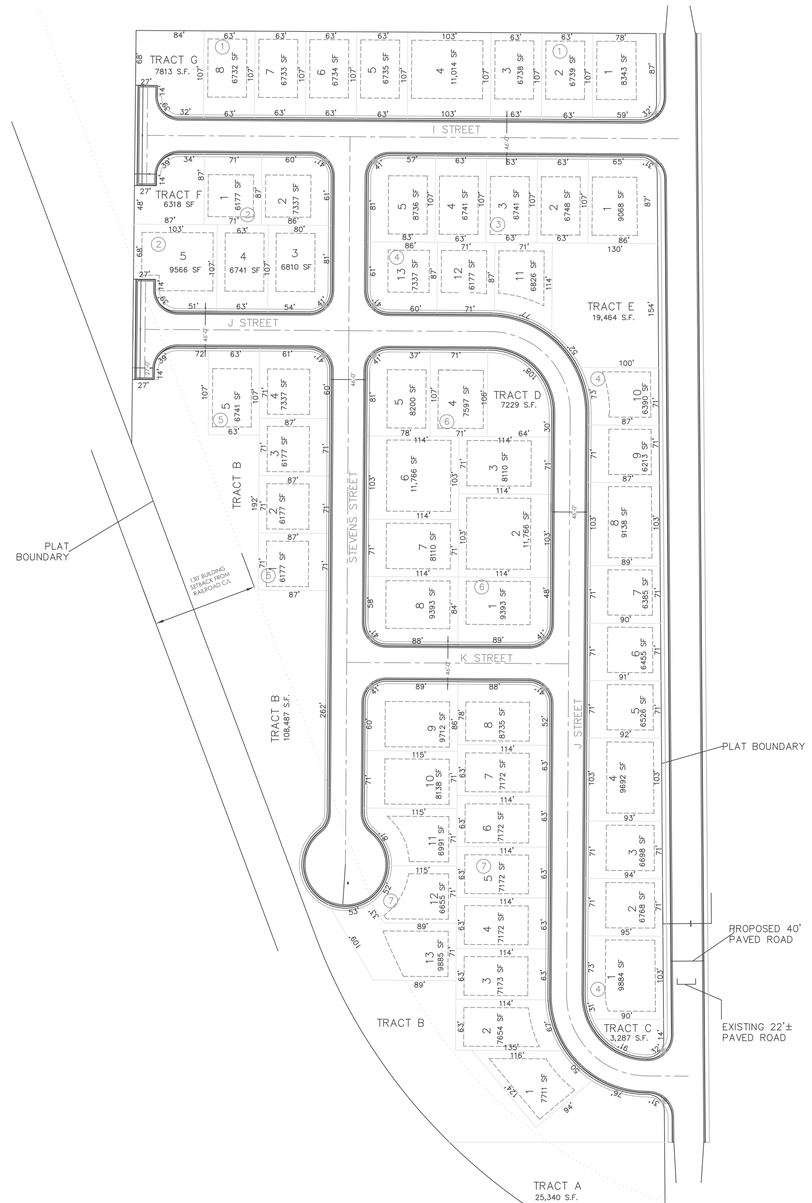

PROJECT INFORMATION

OWNER:	HABITAT FOR HUMANITY – SPOKANE
OWNER CONTACT:	509.534.2552
OWNER ADDRESS:	732 N. NAPA ST., SPOKANE WA.
PROJECT ADDRESS:	HOPE MEADOWS DEVELOPMENT 1100 S. DALTON RD.
PARCEL NUMBERS:	28112.0091, 28112.0076, 28112.9125
LEGAL DESCRIPTION:	ALL THAT PORTION OF THE EAST HALF OF THE NORTHWEST QUARTER OF SECTION 11, TOWNSHIP 28 NORTH, RANGE 42 EAST LYING WEST OF DALTON ROAD AND LYING EASTERLY OF GREAT NORTHERN RAILWAY CO. RIGHT OF WAY. EXCEPT THE NORTH 602 FEET THEREOF, EXCEPT THE NORHTWEST QUARTER OF THE NORTHWEST QUARTER OF SAID SECTION 11.
LOT SIZE:	19.2 ACRES
PROJECT SIZE (PER SIDE) MAIN FLOOR (FINISHED):	671 SQ. FT.
GARAGE:	461 SQ. FT.
DIRECTIONS:	FROM DOWNTOWN SPOKANE, PROCEED NORTH ON 395 TO THE CITY OF DEER PARK. TURN RIGHT ON DALTON RD. HEAD NORTH ACROSS THE RAILROAD TRACKS. DEVELOPMENT IS ON THE WEST SIDE OF DALTON ROAD, SOUTH OF EAST H STREET.

CODE DATA

DEVELOPMENT AUTHORITY:	CITY OF DEER PARK
ZONING:	R3A
BUILDING CODE:	2009 INTERNATIONAL RESIDENTIAL CODE
BUILDING TYPE/OCCUPANCY:	R–3 (RESIDENCE)
CONSTRUCTION TYPE:	V–N
BUILDING HEIGHT:	23'–1"
IRC CLIMATE ZONE:	5
WSEC CLIMATE ZONE:	2
ENERGY CODE QUALIFICATIONS	
TOTAL GLAZING:	128 SQ. FT.
CONDITIONED SPACE:	2366 SQ. FT.
GLAZING PERCENTAGE:	10%
GLAZING TYPE:	LOW–E (U=0.30)
WALL INSULATION:	R21 BATT + R10 RIGID FOAM
ROOF INSULATION:	R49 BLOWN–IN
HEAT SOURCE:	RADIANT FLOOR
COMPLIANCE:	(OPTION I)
DESIGN LOADS	
GROUND SNOW LOAD	45 PSF
FROST DEPTH	36 INCHES
ROOF LIVE LOAD:	45 PSF
FLOOR LIVE LOAD:	40 PSF
BASIC WIND SPEED:	85 MPH, EXPOSURE B
SEISMIC DESIGN CATEGORY:	C

SHEET INDEX

ARCHITECTURAL

STRUCTURAL AND MECHANICAL

VICINITY MAP

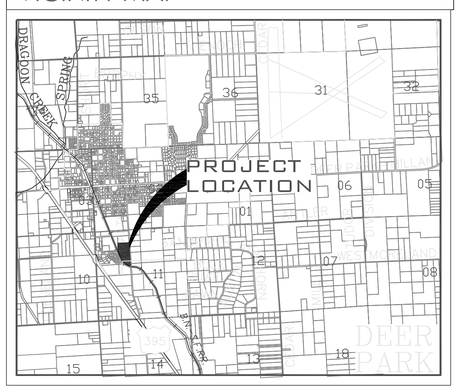

integrus ARCHITECTURE
10 SOUTH MAIN STREET, SPOKANE, WA. 99201
TELEPHONE (509)455-9581

Habitat for Humanity® Spokane

HISS 3X3

COVER SHEET

Date:	Date
Job No.:	JOB NO.
Drawn By:	XXX
Checked by:	XXX
Filename:	*.DWG

Revisions

#	Date	Description

A0.1

A0.1

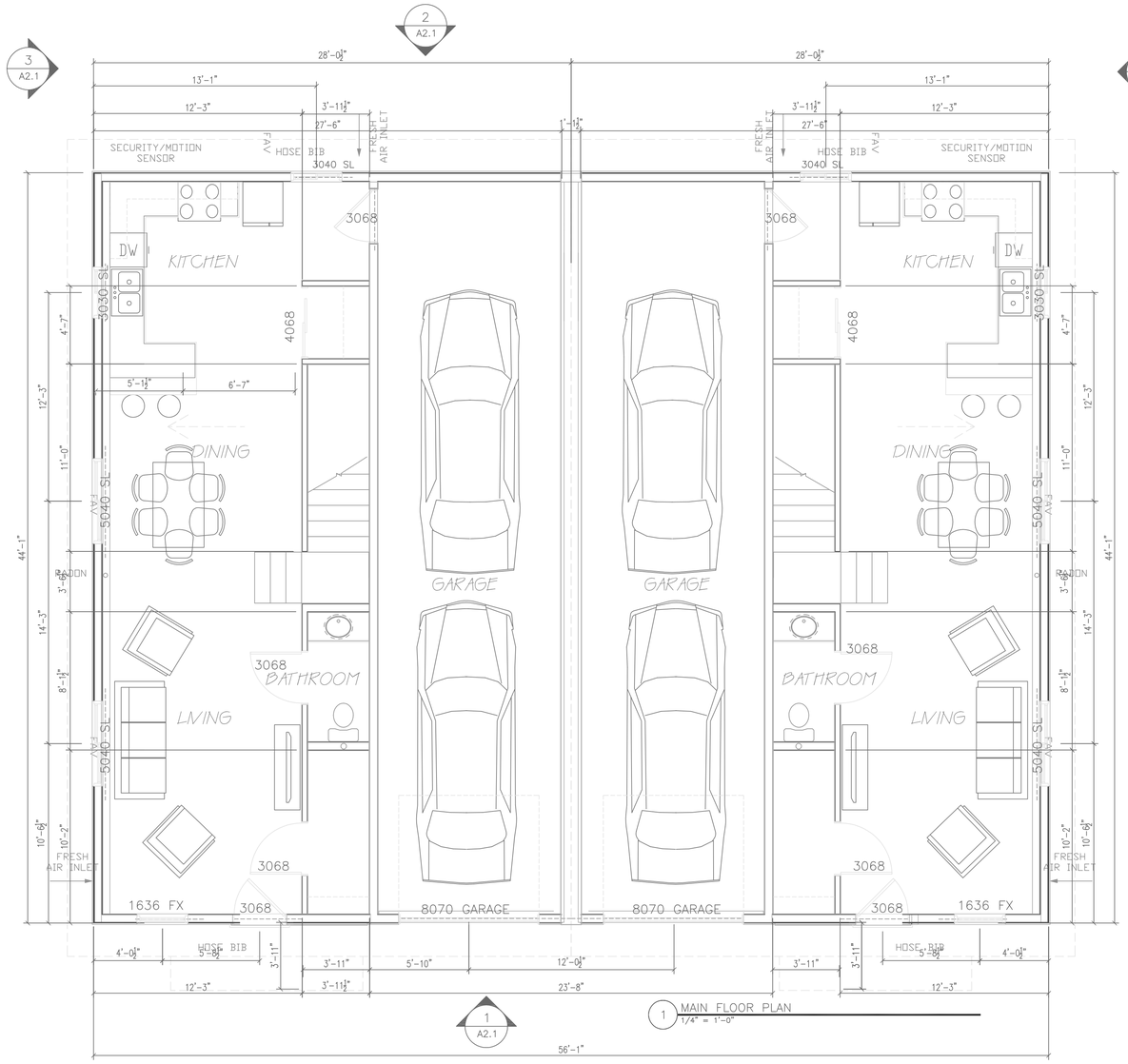

1 MAIN FLOOR PLAN
1/4" = 1'-0"

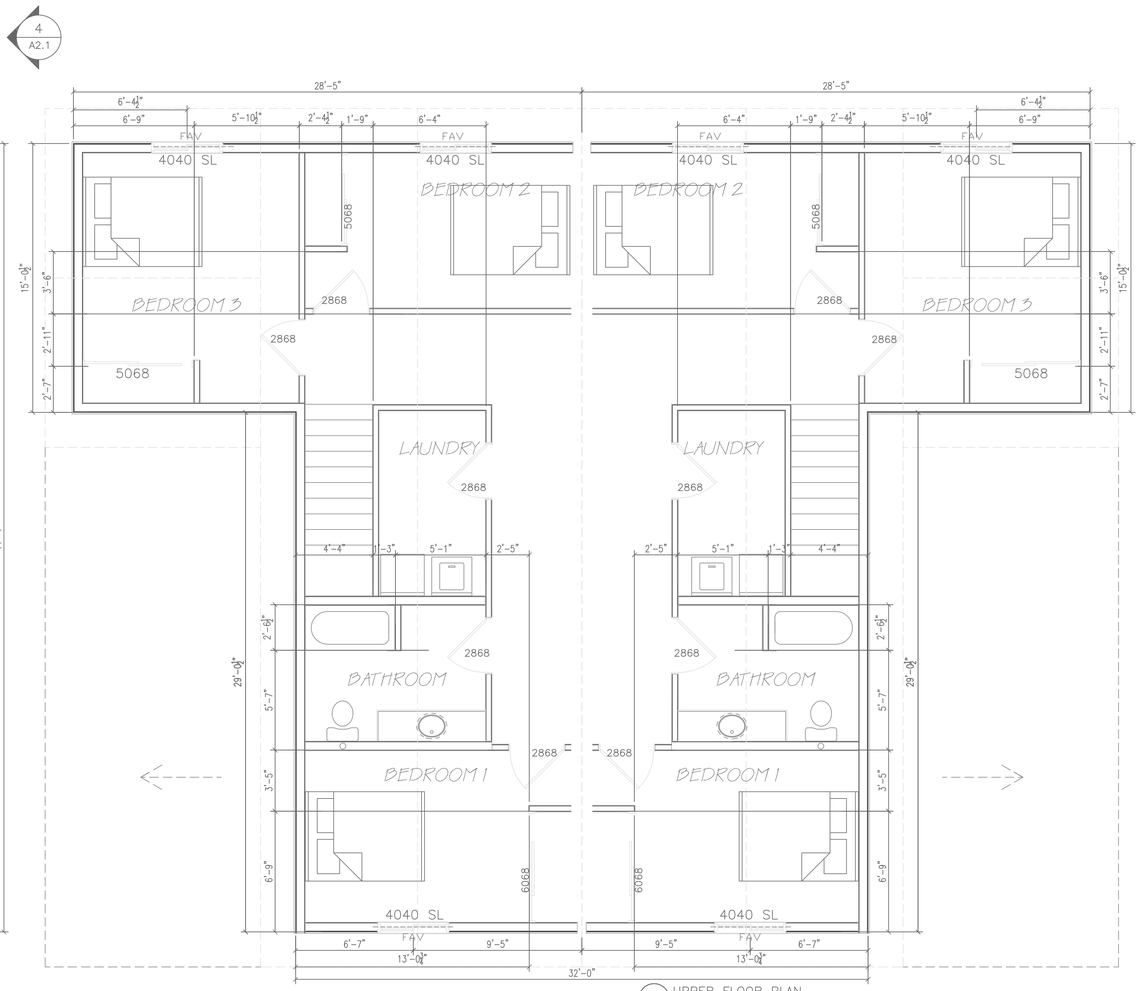

1 UPPER FLOOR PLAN
1/4" = 1'-0"

GENERAL SHEET NOTES

1. ALL DIMENSIONS ARE TO FACE OF STUD AT EXTERIOR WALLS AND FACE OF STUD AT INTERIOR WALLS. ALL WINDOW AND DOOR DIMENSIONS ARE TO CENTER.
2. INSTALL CO DETECTOR IN MECHANICAL ROOM (ALSO SATISFIES AS ROOM ADJACENT TO GARAGE AND ONE PER FLOOR). IN TWO STORY MODELS, INSTALL A CO DETECTOR IN UPSTAIRS LAUNDRY ROOM.
3. INSTALL MOTION SENSORS OR DAYLIGHT SENSORS FOR ALL EXTERIOR LIGHTING
4. HOSE BIBS TO BE LOCATED ADJACENT TO INTERIOR INTERSECTING WALL FOR STUB LENGTH

integrus ARCHITECTURE
10 SOUTH MAIN STREET, SPOKANE, WA. 99201
TELEPHONE: (509)534-8481

Habitat for Humanity® Spokane

HISS 3X3

FLOOR PLANS

Date:	Date
Job No.:	JOB NO.
Drawn By:	XXX
Checked by:	XXX
Filename:	*.DWG

Revisions

#	Date	Description

A1.1

A1.1

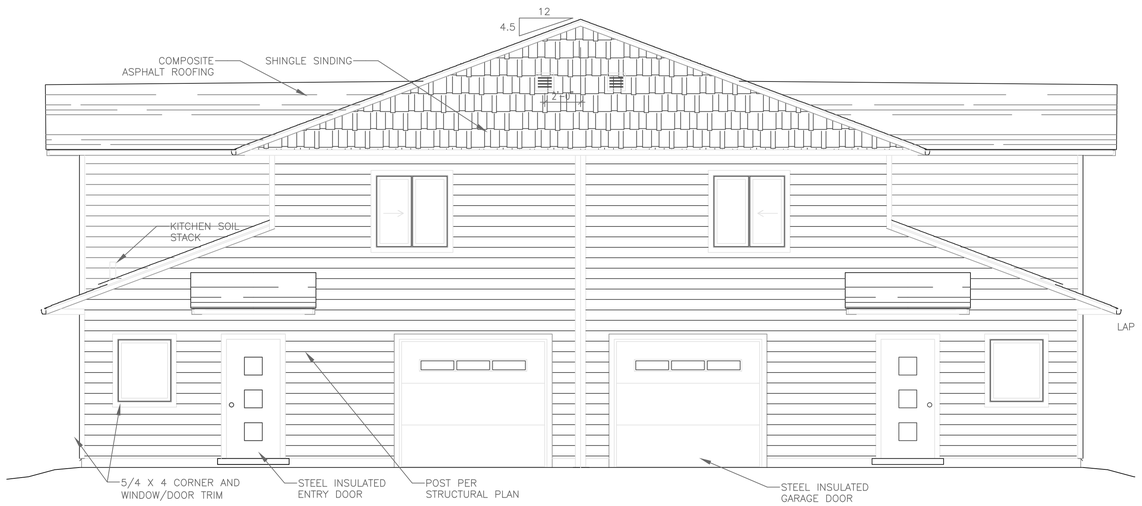

1 FRONT ELEVATION
1/4"=1'-0"

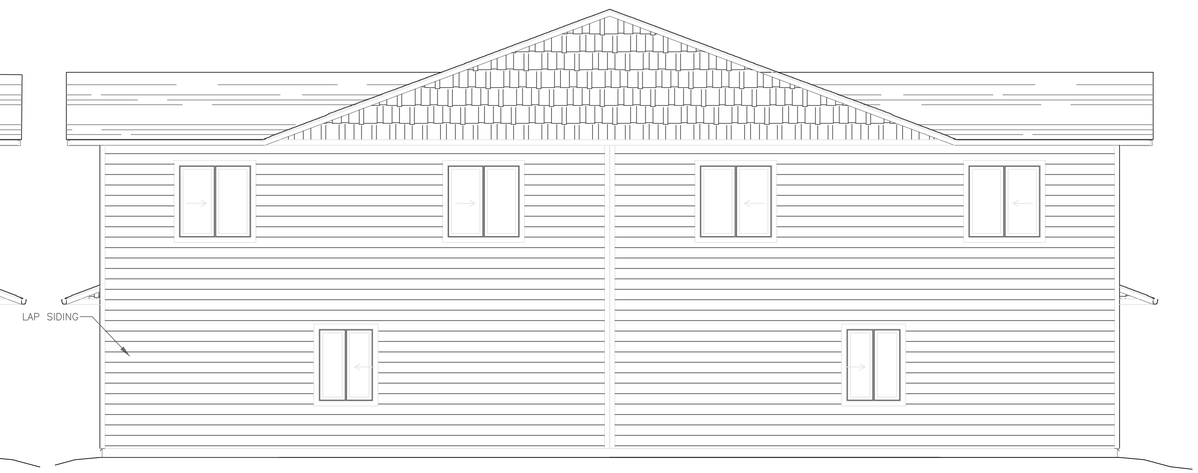

2 BACK ELEVATION
1/4"=1'-0"

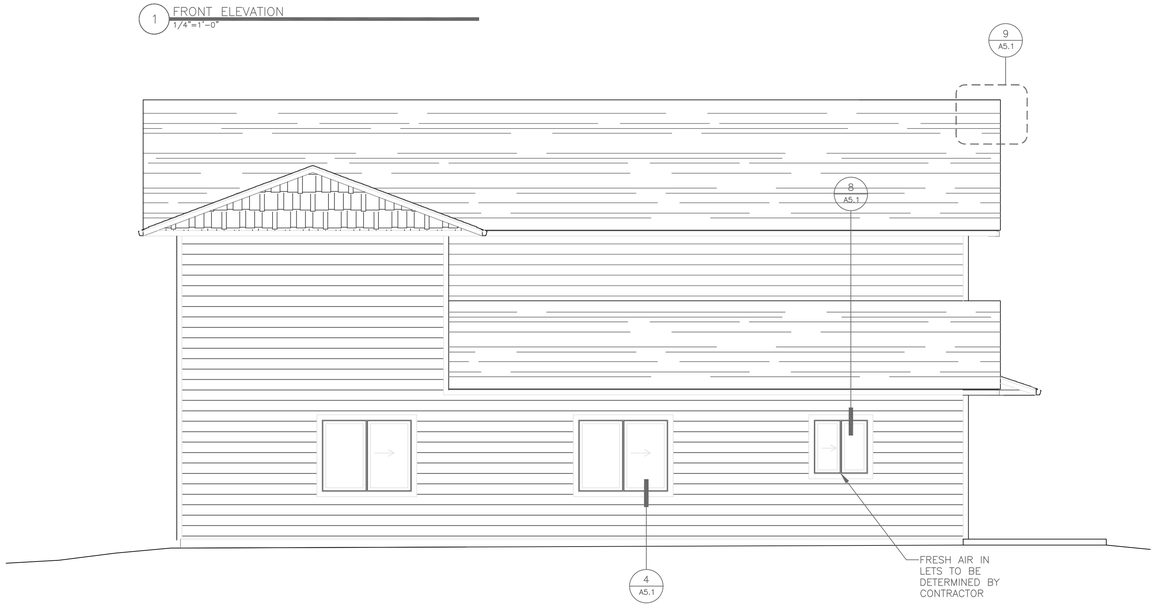

3 SIDE ELEVATION
1/4"=1'-0"

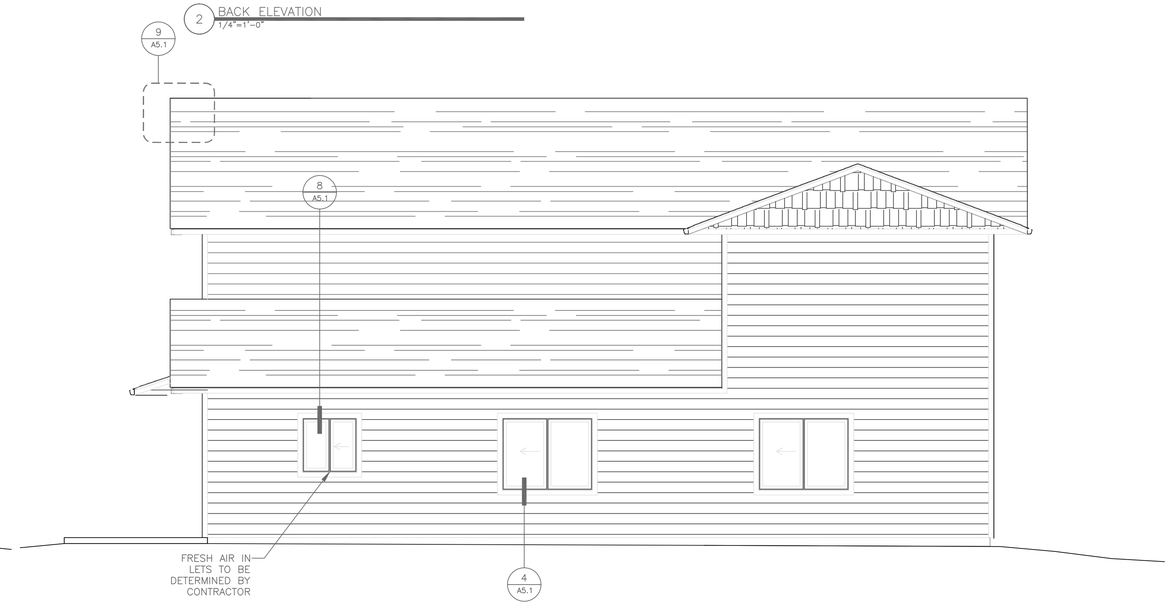

3 SIDE ELEVATION
1/4"=1'-0"

integrus ARCHITECTURE
10 SOUTH MAIN STREET SPOKANE, WA. 99201
TELEPHONE (509)455-9581

Habitat for Humanity® Spokane

ELEVATIONS

Date:	Date
Job No.:	JOB NO.
Drawn By:	XXX
Checked by:	XXX
Filename:	*.DWG

Revisions

#	Date	Description

A2.1

A2.1

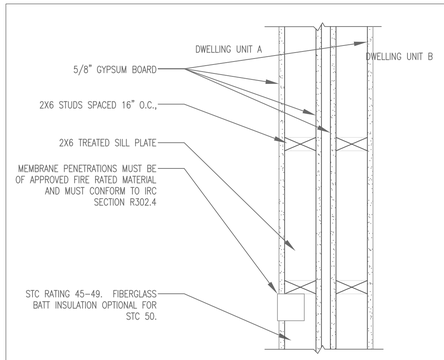

1 FIRE WALL DETAIL THROUGH WALL
1 1/2"=1'-0"
DTL-001

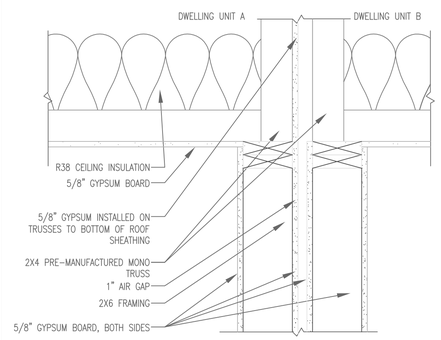

2 FIRE WALL DETAIL AT CEILING (1 HR.) GA WP5512
1 1/2"=1'-0"
DTL-002

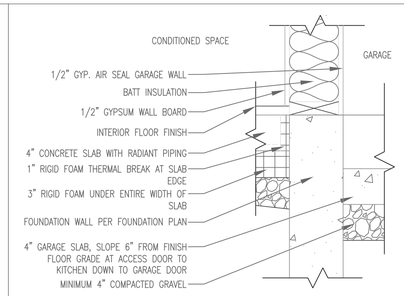

3 SLAB DETAIL AT GARAGE SEPARATION WALL
1 1/2"=1'-0"
DTL-003

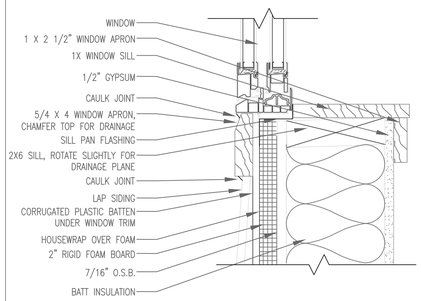

4 WINDOW SILL DETAIL trim over battens window over foam
3"=1'-0"
DTL-004

*** USE THIS DETAIL WHERE OVERHANG EXTENDS INTO 5 FOOT SETBACK FROM PROPERTY LINE ***

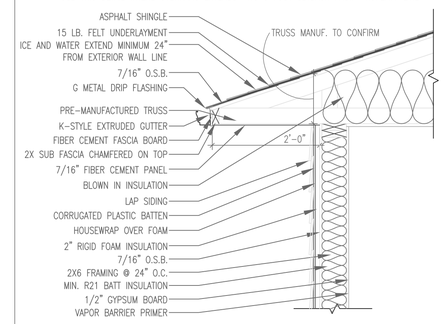

5 FIRE RATED EAVE DETAIL TYP.
3/4"=1'-0"
DTL-005

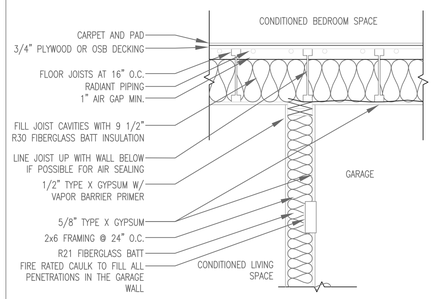

6 GARAGE ISOLATION DETAIL 2 STORY MODULES
3/4"=1'-0"
DTL-006

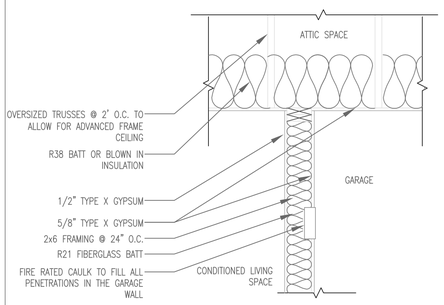

7 GARAGE ISOLATION DETAIL 1 STORY MODULES
3/4"=1'-0"
DTL-007

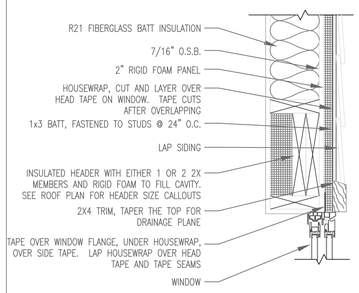

8 INSULATED HEADER DETAIL TYP.
1 1/2"=1'-0"
DTL-008

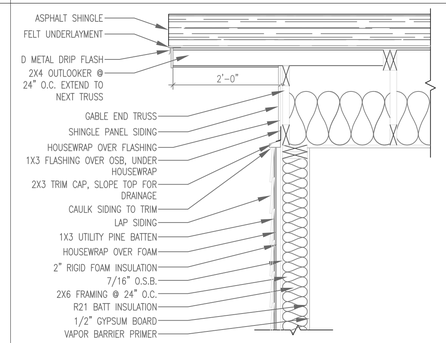

9 GABLE WALL DETAIL, TYP.
3/4"=1'-0"
DTL-010

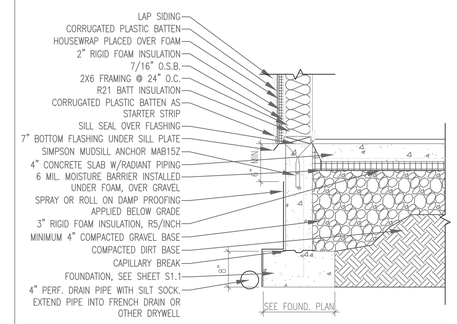

10 FOOTING DETAIL TYP.
3/4"=1'-0"
DTL-011

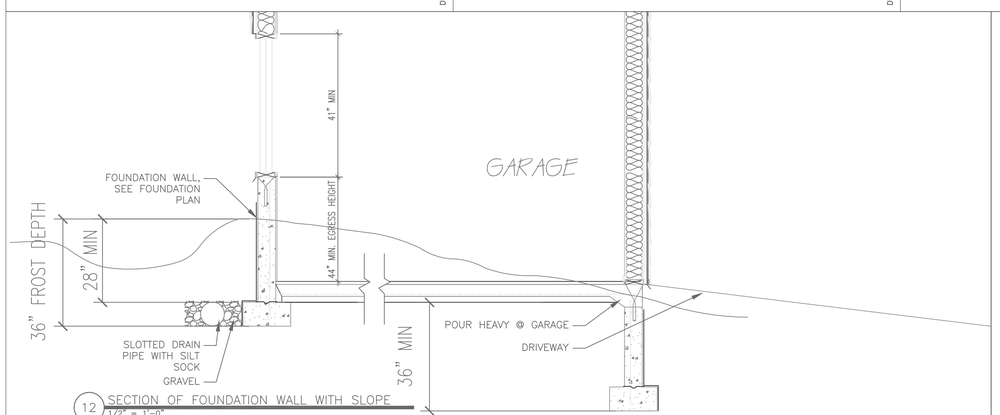

12 SECTION OF FOUNDATION WALL WITH SLOPE
1/2" = 1'-0"

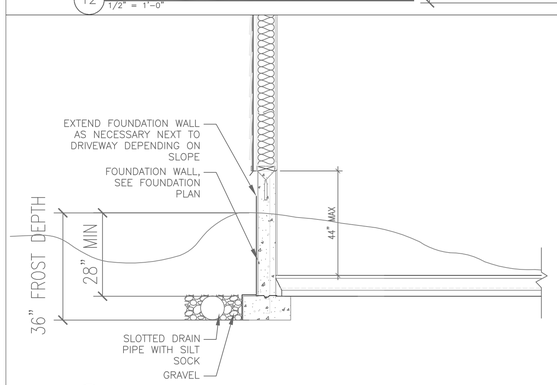

13 SECTION OF FOUNDATION WALL ACCROSS SLOPE
1/2" = 1'-0"

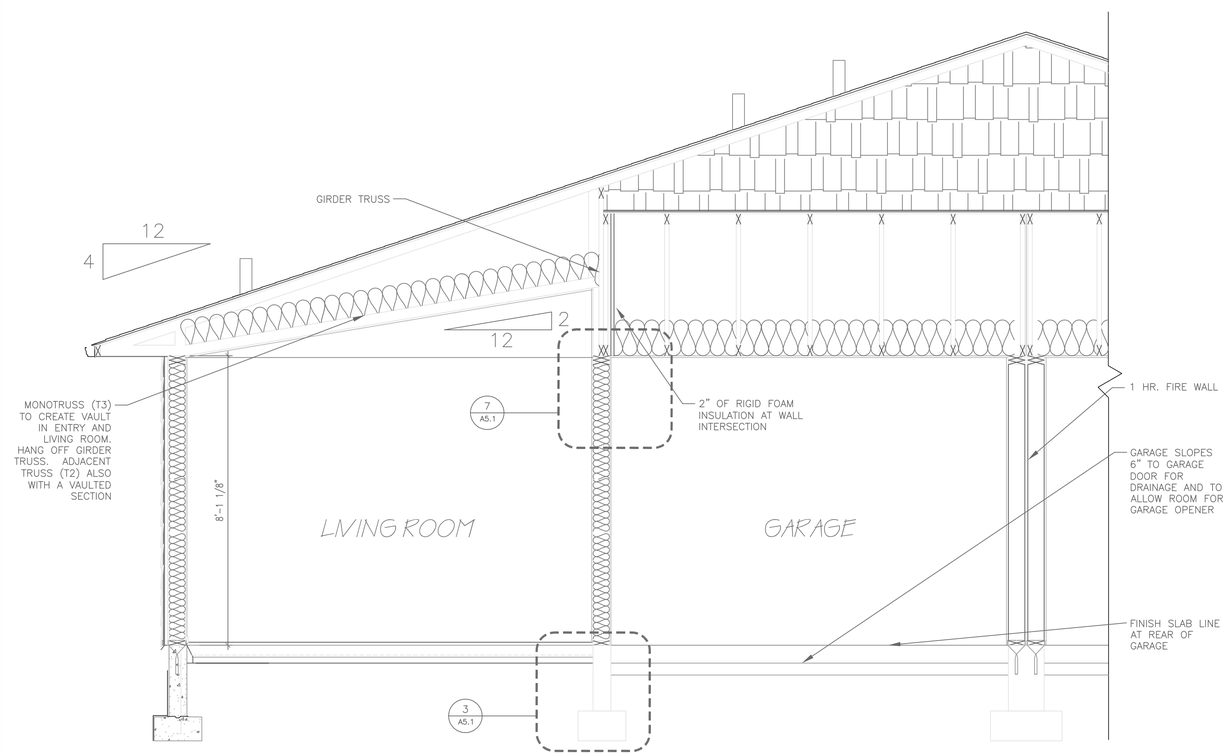

11 HOUSE SECTION – SIM. BOTH SIDES
1/2" = 1'-0"

integrus ARCHITECTURE

10 SOUTH MAIN STREET, SPOKANE, WA. 99201
TELEPHONE: (509)838-8681

Habitat for Humanity® Spokane

DETAILS

Date:	Date
Job No.:	JOB NO.
Drawn By:	XXX
Checked by:	XXX
Filename:	*.DWG

Revisions

#	Date	Description

A5.1

A5.1

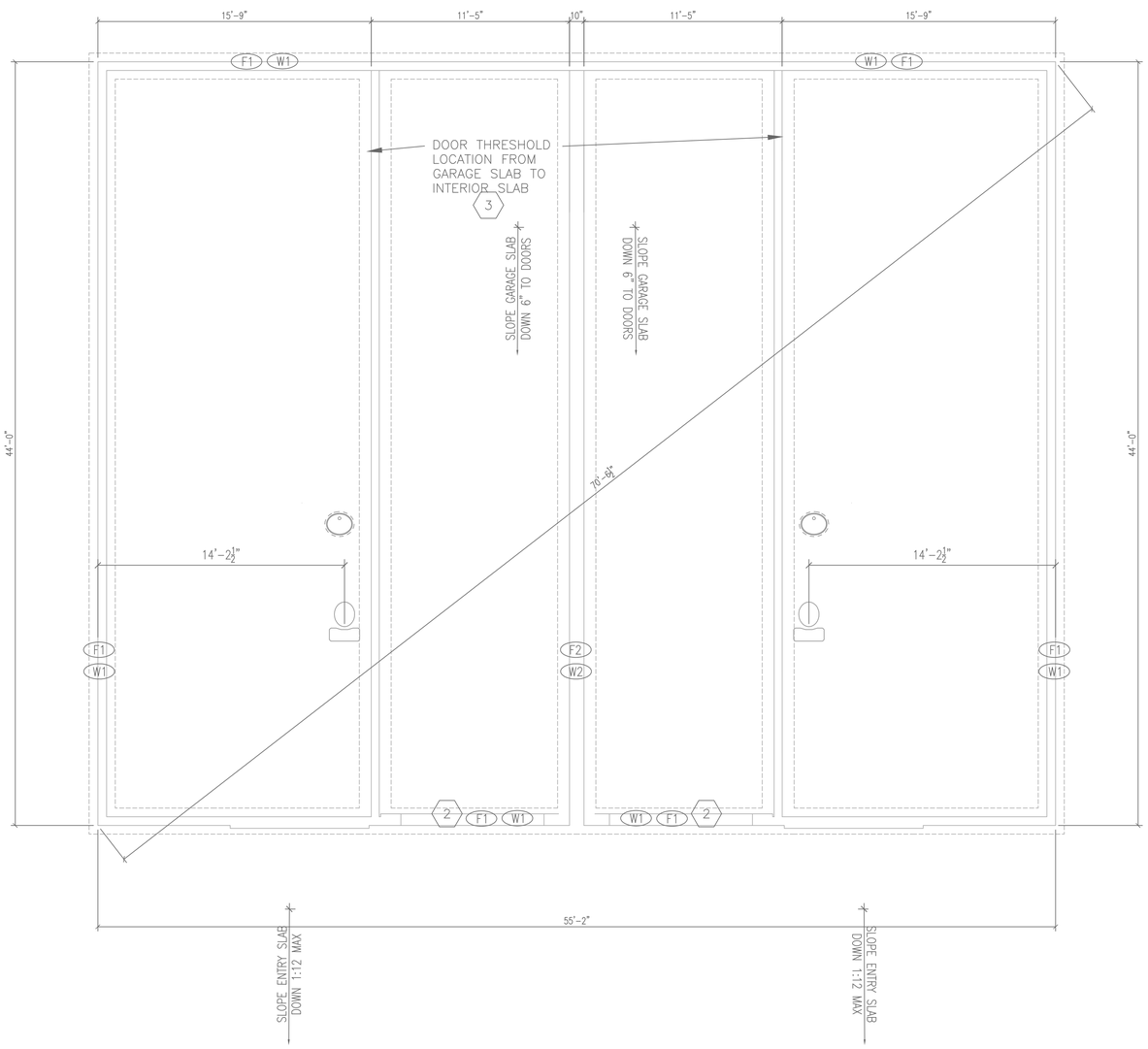

1 FOUNDATION PLAN
1/4"=1'-0"

FOUNDATION LEGEND

F1	16" WIDE x 8" DEEP CONTINUOUS FOOTING W/ (2) #4
F2	20" WIDE x 8" DEEP CONTINUOUS FOOTING W/ (2) #4
F3	24" WIDE x 10" DEEP CONTINUOUS FOOTING W/ (3) #4
F4	2'X2' SQUARE x 12" DEEP PIER FOOTING W/ (3) #4
W1	6" CONCRETE WALL W/ #4 HORIZ. & VERT. @ 18" O.C.
W2	8" CONCRETE WALL W/ #4 HORIZ. & VERT. @ 18" O.C.
W3	13 1/4" CONCRETE WALL W/ #4 HORIZ. & VERT. @ 18" O.C.

FOUNDATION NOTES

1. ALL CONCRETE SHALL BE 5 SACK MINIMUM, HAVE A MINIMUM 28 DAY COMPRESSIVE STRENGTH OF 3000 PSI AND A MAXIMUM SLUMP OF 5".
2. ALL REBAR TO BE CLEAN, DEFORMED BARS MEETING ASTM A-615 GRADE 60. LAP REINFORCING BARS 27 DIAMETERS. PROVIDE 3" CONCRETE COVER AT REBAR ADJACENT TO EARTH AND 2" COVER AT ALL OTHER AREAS. PROVIDE #4 REBAR AT 24" O.C. EACH WAY FOR EXTERIOR SLABS. DOWEL REBAR AT SLABS INTO ADJACENT FOUNDATION A MINIMUM OF 2" DEEP.
3. ALL SLABS ON GRADE TO BE 4" THICK OVER SELF-COMPACTED PEA GRAVEL. IF NECESSITATED BY SOIL CONDITIONS, BUILD UP SUBBASE USING 5/8" MINUS GRAVEL (WITH FINES), COMPACTING IN 12" LIFTS.
4. PROVIDE ZIP JOINT CONTROL JOINTS AT SLAB SUCH THAT THE SLAB IS DIVIDED INTO 100 S.F. AREAS. PROVIDE SAWCUT CONTROL JOINTS AT EXTERIOR SLABS AS INDICATED, NOT TO EXCEED 10'-0" O.C. EACH WAY.
5. FOOTINGS ARE DESIGNED TO AN ALLOWABLE BEARING PRESSURE OF 1500 PSF. ALL FOOTINGS SHALL BEAR 1'-0" MINIMUM INTO NATURAL UNDISTURBED SOIL, 2'-6" MINIMUM BELOW FINISH GRADE.
6. ATTACH TREATED WOOD SILLS TO CONCRETE FOUNDATION PER DETAIL 9/A2.1.

SHEET KEYNOTES

1. ---
2. DROP FOUNDATION WALL 10" AT GARAGE OPENING FOR SLAB TO CONTINUE UNDER GARAGE DOOR SILLS
3. BEGIN SLOPE OF GARAGE SLAB JUST PAST ACCESS DOOR TO HOUSE
4. FLOOR DRAIN GENERAL LOCATION
5. CONFIRM PLUMBING AND RADON STUBOUT LOCATIONS IN SLAB

integrus ARCHITECTURE
10 SOUTH MAIN STREET, SPOKANE, WA. 99201
TELEPHONE: (509)838-2691

Habitat for Humanity® Spokane

FOUNDATION

Date:	Date
Job No.:	JOB NO.
Drawn By:	XXX
Checked by:	XXX
Filename:	*.DWG

Revisions

#	Date	Description

S1.1

S1.1

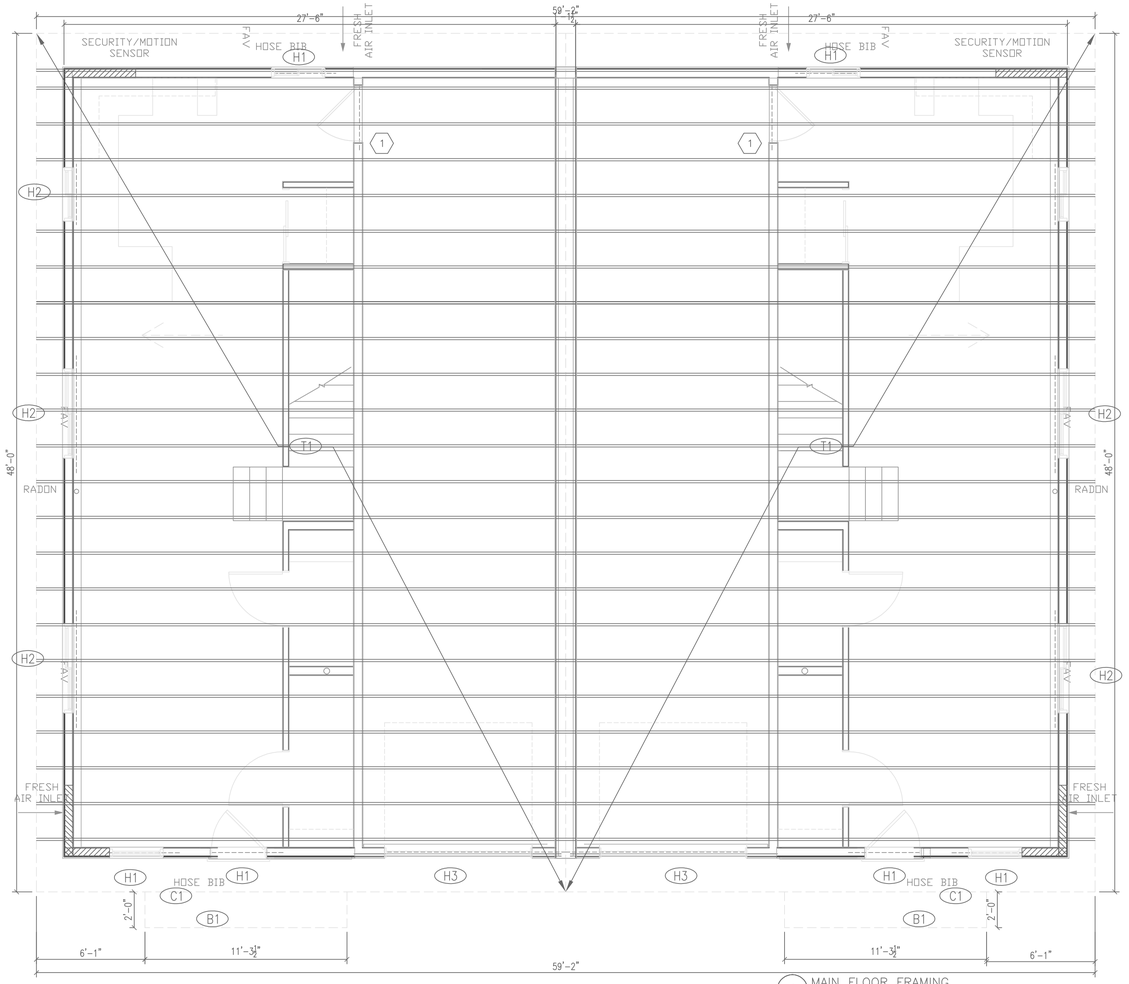

1 MAIN FLOOR FRAMING
1/4"=1'-0"

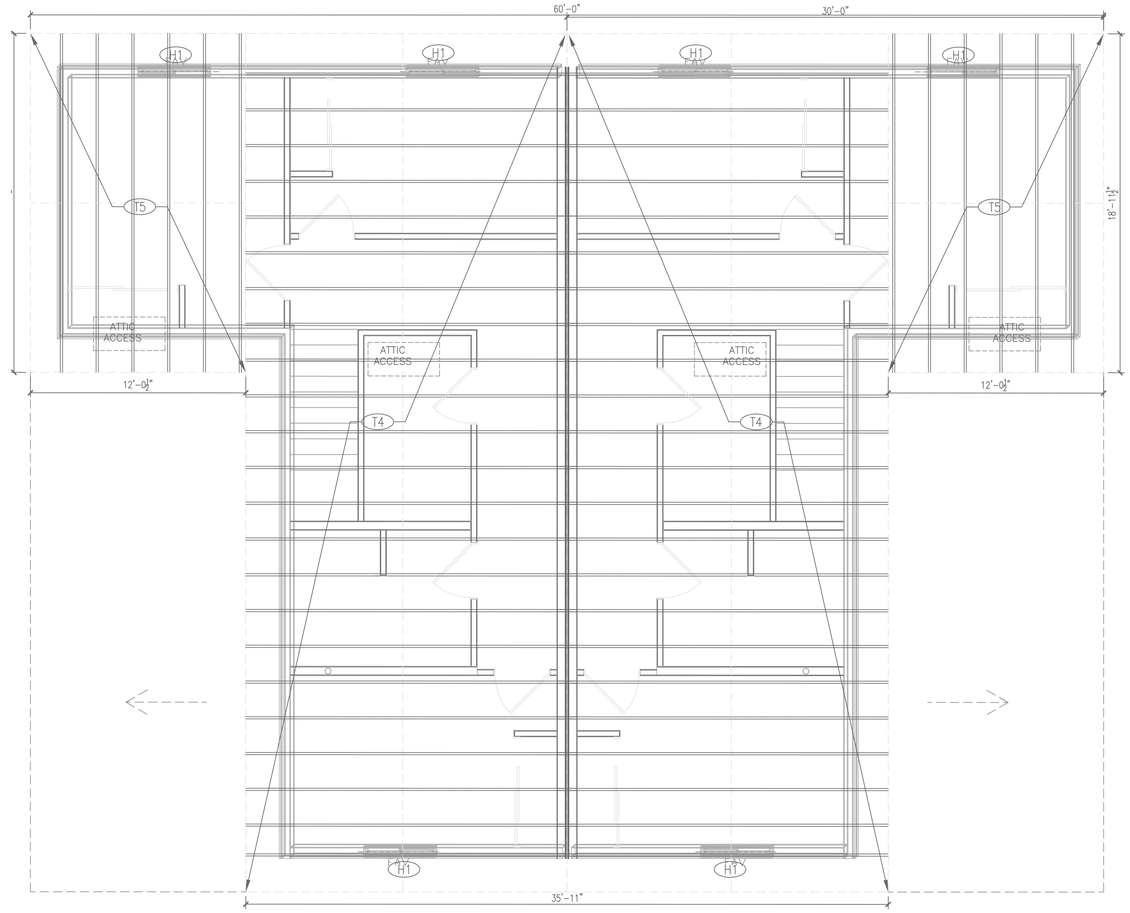

FRAMING NOTES

1. ALL EXTERIOR BRACED WALL LINE BWP LOCATIONS WILL USE THE CS-WSP METHOD AND CONFORM TO THE FASTENING REQUIREMENTS IN IRC2009 TABLE R602.10.4.1
2. ALL INTERIOR BRACED WALL LINE BWP LOCATIONS WILL USE METHOD GB AND WILL HAVE FASTENERS @ 7" O.C. (BOTH SIDES) AS CALLED OUT IN NOTE G, TABLE R602.10.1.2(1) IN IRC2009.
3. THIS BUILDING AS A COMPLETED WHOLE IS DESIGNED AS A STABLE STRUCTURE IN RESISTING THE ACTION OF THE ANTICIPATED LOADS. THE CONTRACTOR IS RESPONSIBLE FOR SUCH MEASURES AS ARE NECESSARY TO TEMPORARILY SUPPORT INCOMPLETE PORTIONS OF THE WORK UNTIL SUCH TIME AS THE ENTIRE STRUCTURE IS COMPLETE.
4. ALL FRAMING LUMBER TO BE #2 OR BETTER FIR/LARCH, KILN DRIED. WALL SHEATHING TO BE 1/2" OSB. ROOF SHEATHING TO BE 5/8" OSB. FLOOR SHEATHING TO BE 3/4" T&G EDGEGOLD OSB, GLUED AND SCREWED.
5. IF NOT OTHERWISE NOTED IN THE DRAWINGS, HEADERS TO BE SINGLE 2x10 FOR UP TO 4 FT. SPANS; DOUBLE 2x10 FOR UP TO 6 FT. SPANS. VERIFY ANY HEADERS OVER 6 FT. NOT NOTED IN THE DRAWINGS.
6. EXTERIOR WALL FRAMING IS 2x6 STUDS AT 24" O.C. FRAME ALL EXTERIOR CORNERS TO ALLOW FOR SUBSEQUENT INSTALLATION OF INSULATION (ADVANCED FRAMING). PROVIDE FIRE BLOCKING ALONG STAIR WALLS AND ANY WALLS 10' OR TALLER.
7. STRUCTURAL GLULAM COLUMNS AND BEAMS TO BE ARCHITECTURAL GRADE. SEE COLUMN & BEAM LEGENDS FOR MEMBER SIZES.
8. TRUSSES TO BE ENGINEERED BY TRUSS MANUFACTURER. INSTALL TRUSSES PER MANUFACTURER. PROVIDE ADEQUATE BRACING DURING ERECTION. PROVIDE HURRICANCE CLIPS AT CONNECTION TO WALLS. PROVIDE 2x4 OUTLOOKERS AT 48" O.C. UNDER GABLE EAVES TO SUPPORT BARGE RAFTER AND SHEATHING.
9. LOCATE ALL INTERIOR DOORS TO ALLOW FOR MINIMUM 3" CLEARANCE FROM ADJACENT WALLS FOR CASING
10. TYPICAL BEARING POINTS 3" MIN.

FRAMING LEGEND

H1	(1) 2x10, OR (2) 2x6
H2	(2) 2x10,
H3	(1) 3 1/8"x 9" GLULAM BEAM, 3" BEARING EACH SIDE
B1	3 1/8"x9" ALASKAN YELLOW CEDAR (OR SIM.) GLULAM BEAM
T1	2X4 BOTTOM CHORD MANUFACTURED MONOTRUSS
T2	2X4 VAULTED MANUFACTURED MONOTRUSS SEE 11/A5.1
T3	2X4 VAULTED MANUFACTURED TRUSS
T4	2X4 BOTTOM CHORD MANUFACTURED TRUSS
T5	2X4 SHORT MONOTRUSS OR 2X12 RAFTERS
C1	6 3/4 X 6 3/4 ALASKAN YELLOW CEDAR GLULAM POST OR SIM.
C2	(3) BUNDLED 2X4 OR 2X6 DEPENDING ON WALL THICKNESS
J1	BCI 5000 1.7 FLOOR JOISTS OR SIM. CONTRACTOR CAN PICK BASED ON DESIRED DEFLECTION

integrus ARCHITECTURE
10 SOUTH MAIN STREET, SPOKANE, WA. 99201
TELEPHONE: (509)838-8681

Habitat for Humanity® Spokane

HISS 3X3

FRAMING PLANS

Date:	Date
Job No.:	JOB NO.
Drawn By:	XXX
Checked by:	XXX
Filename:	*.DWG

Revisions

#	Date	Description

S1.2

S1.2

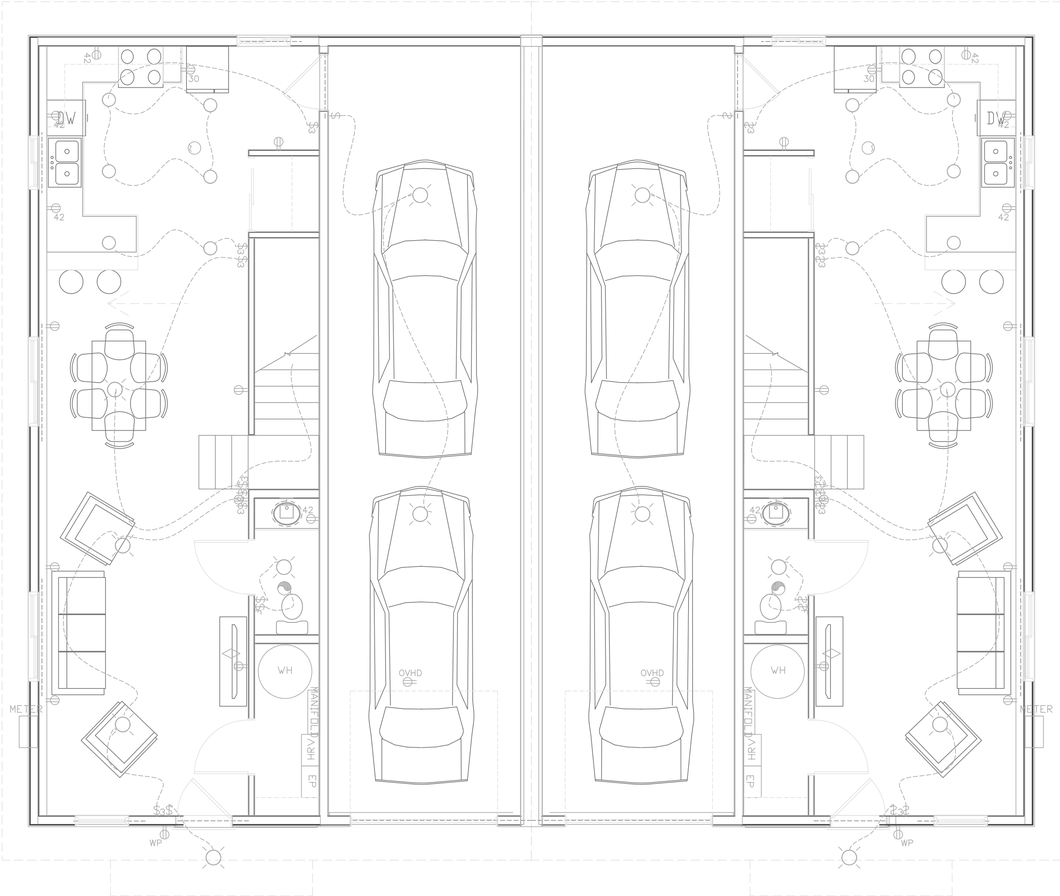

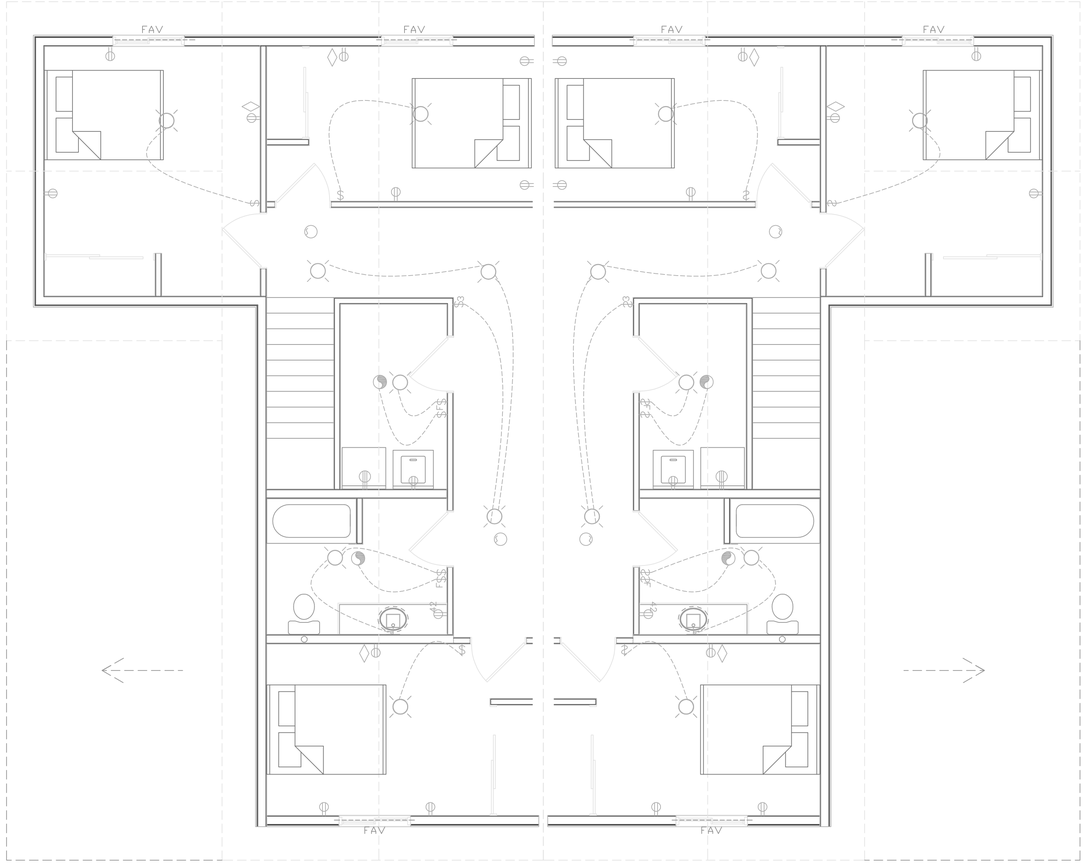

ELECTRICAL SYMBOLS LEGEND

	120v DUPLEX RECEPTACLE
	220v RECEPTACLE
	120v DUPLEX RECEPTACLE, HALF-SWITCHED
	120v FLOOR-MOUNTED RECEPTACLE
GFI	GROUND-FAULT CIRCUIT INTERRUPT RECEPTACLE
WP	WEATHERPROOF RECEPTACLE
MB	METAL BOX RECEPTACLE
$	SINGLE POLE SWITCH
$3,4	THREE-WAY OR FOUR-WAY SWITCH
$D	DIMMER SWITCH
	TELEPHONE/COMPUTER OUTLET
	TELEVISION CABLE OUTLET
	SMOKE DETECTOR
S	SMOKE/CARBON MONOXIDE DETECTOR
	FAN, NUMBER DENOTES CFM
EP	MAIN ELECTRICAL PANEL

ELECTRICAL/ MECH NOTES

1. VERIFY ALL ELECTRICAL DEVICE LOCATIONS WITH OWNER PRIOR TO ROUGH-IN.
2. TOP OF OUTLETS ARE AT 18" FROM FINISH FLOOR UNLESS OTHERWISE NOTED.
3. SEE ELEVATIONS FOR APPROXIMATE LOCATIONS OF ALL ROOF PENETRATIONS.
4. RECEPTACLES SHALL BE PLACED SO THAT NO POINT ALONG THE FLOOR LINE OR OF AN UNBROKEN WALL OR FIXED GLASS PANEL 2 OR MORE FEET IN LENGTH IS MORE THAN 6 FEET FROM AN OUTLET WITHIN THAT WALL OR FIXED GLASS PANEL PER SECTION E3801.2.
5. OUTLETS AT KITCHEN COUNTER GREATER THAN 12" SHALL BE INSTALLED SO THAT NO POINT ALONG THE WALL LINE IS GREATER THAN 24" FROM A RECEPTACLE OUTLET PER SECTION E3801.4.
6. ELECTRICAL RECEPTACLES IN BATHROOMS, KITCHENS, EXTERIOR LOCATIONS, AND GARAGES SHALL BE GFCI PER SECTION E3802.
7. WHERE POSSIBLE IN SLOPED CEILINGS, LOCATE SMOKE DETECTORS AS CLOSE TO THE WALL AS POSSIBLE FOR BATTERY EXCHANGE. SMOKE ALARMS ARE REQUIRED TO INTERCONNECTED IN SUCH A MANNER THAT THE ACTUATION OF ONE ALARM WILL ACTIVATE ALL OF THE ALARMS IN THE INDIVIDUAL UNIT. SMOKE ALARMS SHALL RECEIVE THEIR PRIMARY POWER FROM THE BUILDING WIRING, AND WHEN PRIMARY POWER IS INTERRUPTED, SHALL RECEIVE POWER FROM A BATTERY. WIRING SHALL BE PERMANENT AND WITHOUT A DISCONNECTING SWITCH OTHER THAN THOSE REQUIRED FOR OVERCURRENT PROTECTION PER SECTION R313.3.
8. ALL BRANCH CIRCUITS THAT SUPPLY 120 VOLT, SINGLE-PHASE, 15 AND 20 AMP OUTLETS INSTALLED IN BEDROOMS SHALL BE PROTECTED BY A COMBINATION TYPE OR BRANCH/FEEDER TYPE ARC-FAULT CIRCUIT INTERRUPTER INSTALLED TO PROVIDE PROTECTION OF THE ENTIRE BRANCH CIRCUIT PER SECTION E3802.12.

LIGHT FIXTURE LEGEND

	WALL-MOUNT SCONCE
	RECESSED
	SURFACE-MOUNT
	SURFACE-MOUNTED FLUORESCENT

SHEET KEYNOTES

1. 2X8 OR DOUBLE WALL FOR SOIL STACK, RADON OR VENTING
2. VENT FOR SINK AND DISHWASHER UP EXTERIOR WALL THROUGH ROOF
3. PLACE KITCHEN CANS 18" FROM EXTERIOR WALL AT COUNTER LOCATIONS
4. FLUSHMOUNT MOTION SENSOR FAN. OPTIONAL LIGHT PER CONTRACTOR.
5. COMBINE FANS AND DUCTS TO MINIMIZE PENETRATINOS TO ENVELOPE.
6. CENTER FIXTURES IN THE SPACE WHEN POSSIBLE

integrus ARCHITECTURE
N SOUTH MAIN STREET, SPOKANE, WA. 99201
TELEPHONE (509)535-9481

Habitat for Humanity® Spokane

HISS 3X3

ELECTRICAL PLANS

Date:	Date
Job No.:	JOB NO.
Drawn By:	XXX
Checked by:	XXX
Filename:	*.DWG

Revisions

#	Date	Description

ME1.1

ME1.1